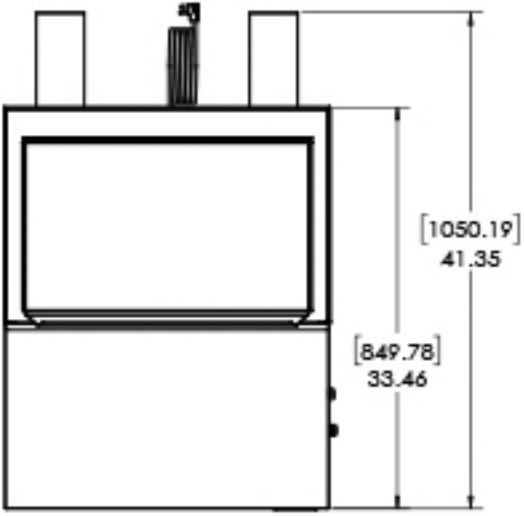
[1050.19]
41.35
[849.78]
33.46

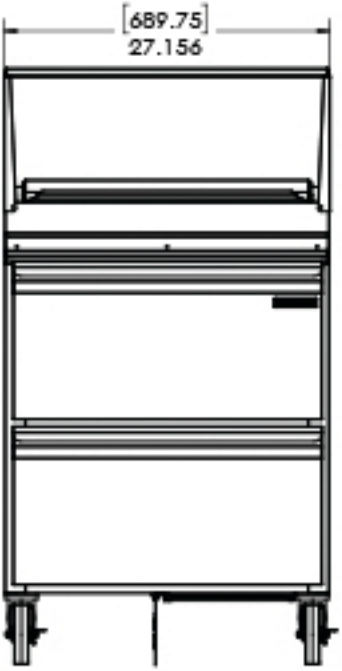
[689.75]
27.156

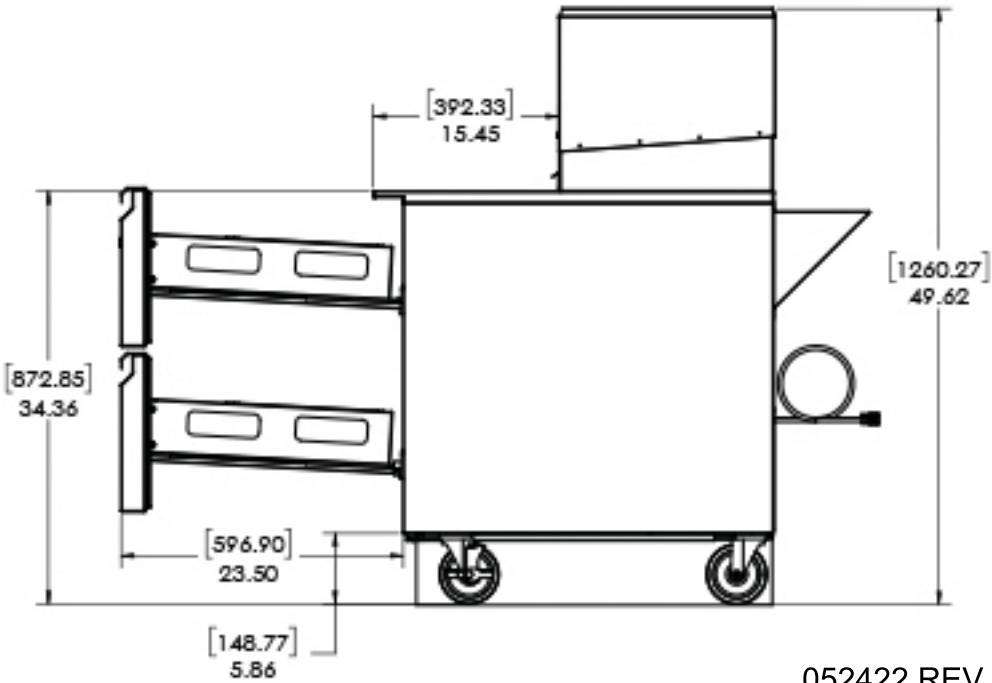
[392.33]
15.45
[1260.27]
49.62
[872.85]
34.36
[596.90]
23.50
[148.77]
5.86