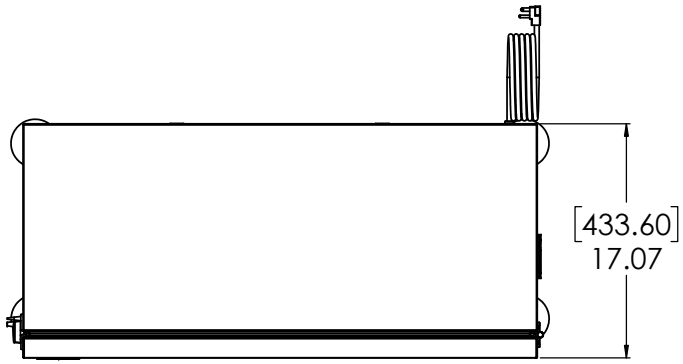
[433.60]
17.07

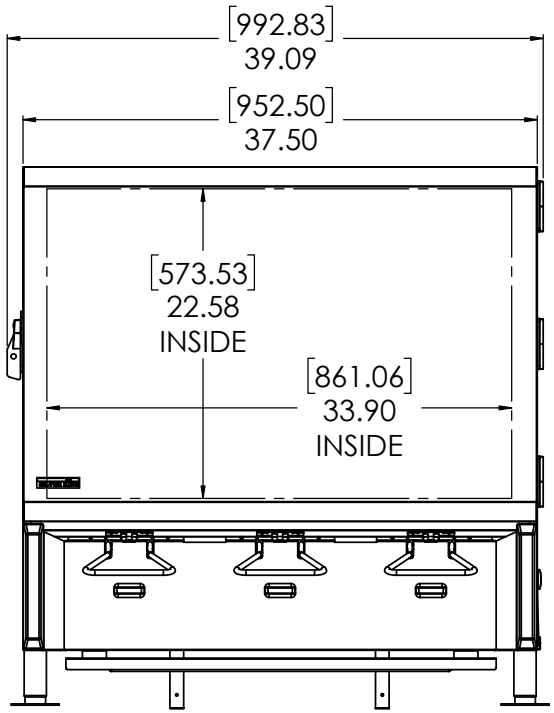
[992.83]
39.09
[952.50]
37.50
[573.53]
22.58
INSIDE
[861.06]
33.90
INSIDE

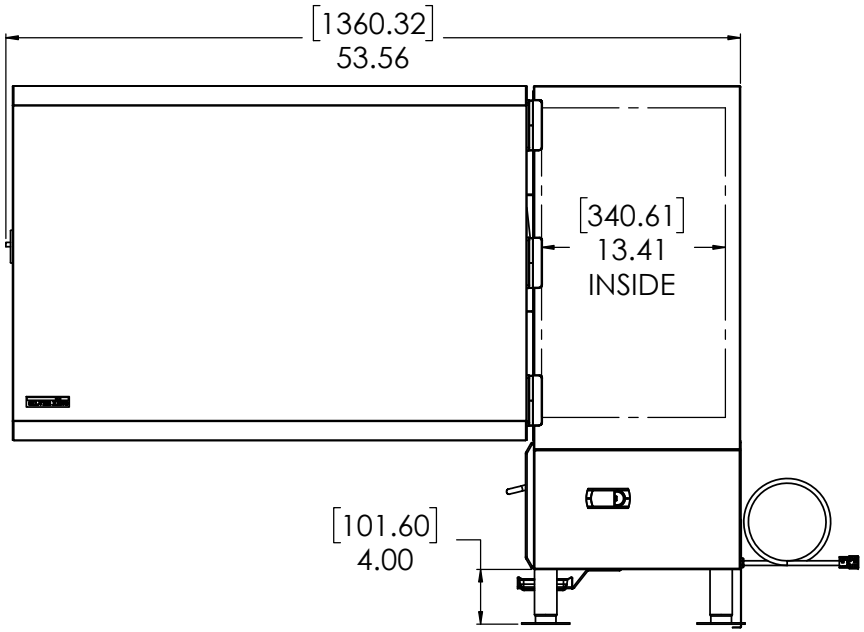
[1360.32]
53.56
[340.61]
13.41
INSIDE
[101.60]
4.00

06.10.22