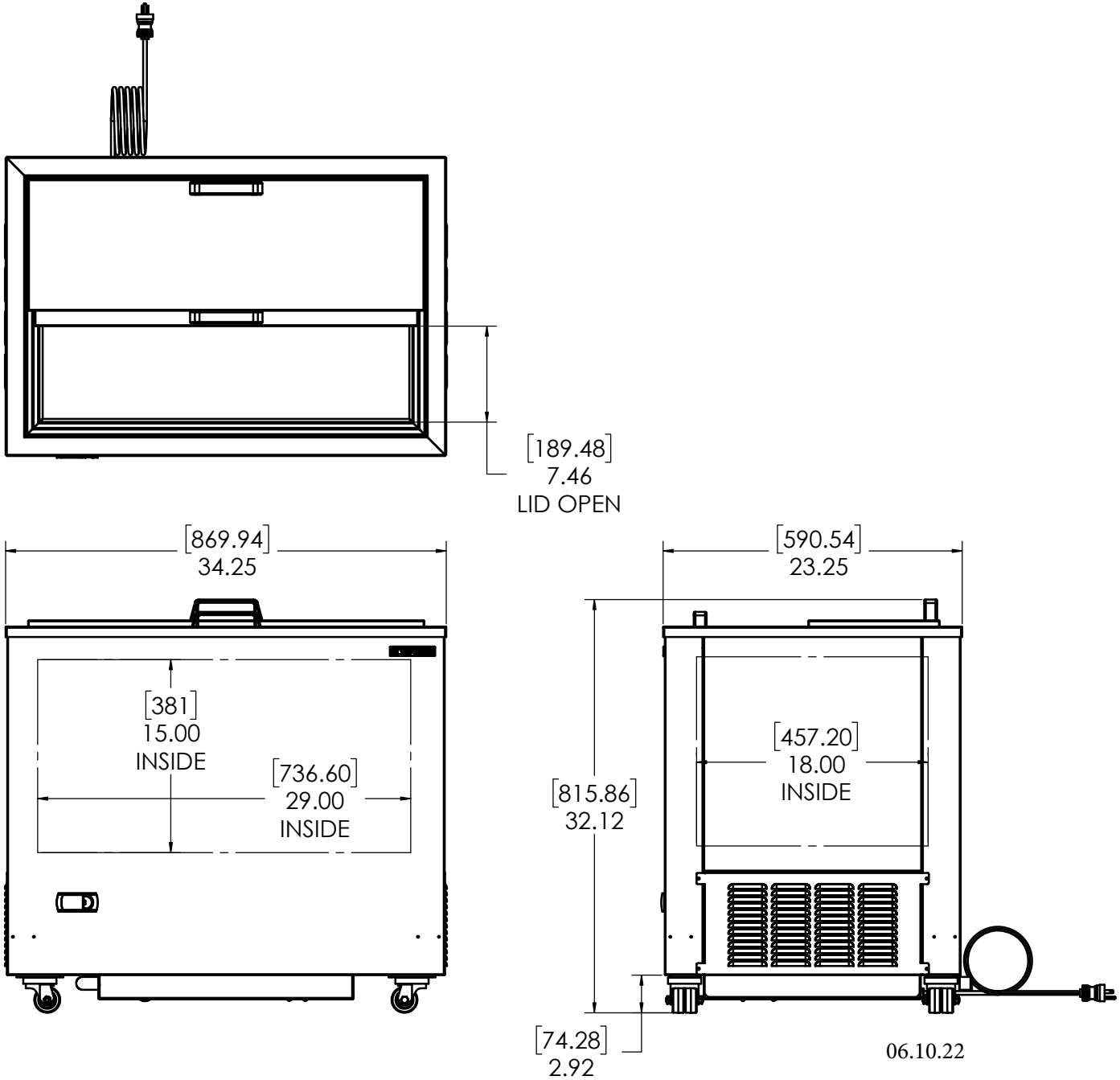
[189.48]
7.46
LID OPEN
[869.94]
34.25
[381]
15.00
INSIDE
[736.60]
29.00
INSIDE
[590.54]
23.25
[457.20]
18.00
INSIDE
[815.86]
32.12
[74.28]
2.92
06.10.22